DS-2CE12DFT-F28
2 MP Full Time Color Camera

ColorVu

24 Color | TRUE WDR | IP67

- 2 MP, 1920 × 1080 resolution
- 24-hour color image
- 2.8 mm fixed lens
- Up to 40 m white light distance
- OSD menu, 3D DNR, true WDR
- 4 in 1 video output (switchable TVI/AHD/CVI/CVBS)
- IP67

Spcification

Camera	
Image Sensor	2 MP CMOS
Resolution	1920 (H) × 1080 (V)
Frame Rate	PAL: 1080p@25fps NTSC: 1080p@30fps
Min. illumination	0.0005 Lux @ (F1.0, AGC ON), 0 Lux with white light
Shutter Time	PAL: 1/25 s to 1/50, 000 s NTSC: 1/30 s to 1/50, 000 s
Slow Shutter	Max. 16 times
Lens	2.8 mm fixed lens
Field of View	2.8 mm, horizontal FOV: 104°, vertical FOV: 54°, diagonal FOV: 126°
Lens Mount	M16
Day & Night	Color
WDR (Wide Dynamic Range)	130 dB
Angle Adjustment	Pan: 0° to 360°; Tilt: 0° to180°; Rotate: 0° to 360°
Menu	
Image Mode	STD/HIGH SAT
AGC	Yes
White Balance	Auto/Manual
HLC	Yes
BLC (Backlight Compensation)	Yes
Privacy Mask	4 programmable privacy masks
Motion Detection	4 programmable areas
WDR	Yes
Functions	Brightness, Sharpness, 3D DNR, Mirror, Smart light
Interface	
Video Output	Switchable TVI/AHD/CVI/CVBS
General	
Operating Conditions	-40 °C to 60 °C (-40 °F to 140 °F), humidity: 90% or less (non-condensing)
Power Supply	12 VDC ± 25% **You are recommended to use one power adapter to supply the power for one camera.*
Power Consumption	Max. 4.2 W
Protection Level	IP67
Material	Front Cover: Metal Main Body: Plastic
White Light	Up to 40 m
Communication	HIKVISION-C
Dimensions	223.1 mm × 77.1 mm × 82.6 mm (8.78" × 3.04" × 3.25")
Weight	Approx. 436 g (0.96 lb.)

Order Model

DS-2CE12DFT-F28

Dimension

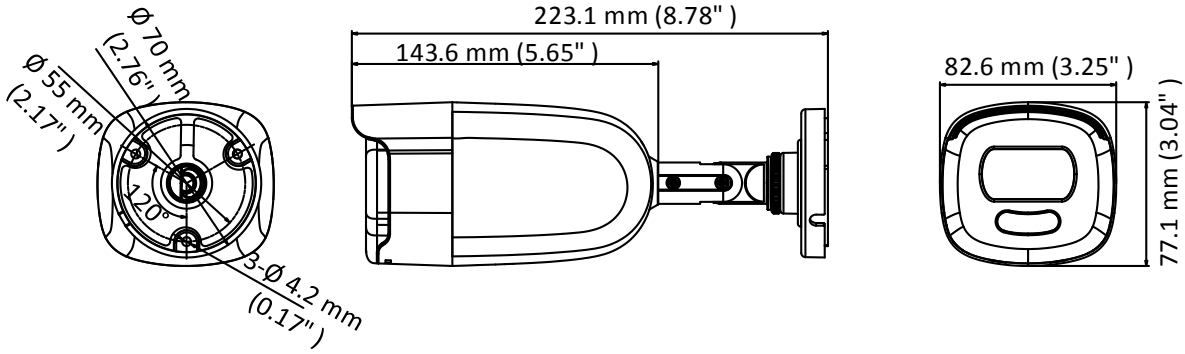

Accessory

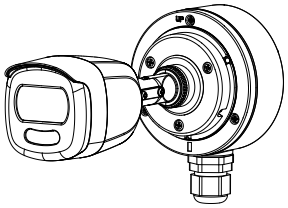

DS-1280ZJ-XS

Junction Box

Distributed by

Headquarters
No.555 Qianmo Road, Binjiang District,
Hangzhou 310051, China
T +86-571-8807-5998
overseasbusiness@hikvision.com

Hikvision USA
T +1-909-895-0400
sales.usa@hikvision.com

Hikvision Australia
T +61-2-8599-4233
salesau@hikvision.com

Hikvision India
T +91-22-28469900
sales@pramahikvision.com

Hikvision Canada
T +1-866-200-6690
sales.canada@hikvision.com

Hikvision Thailand
T +662-275-9949
sales.thailand@hikvision.com

Hikvision Europe
T +31-23-5542770
sales.eu@hikvision.com

Hikvision Italy
T +39-0438-6902
info.it@hikvision.com

Hikvision Brazil
T +55 11 3318-0050
Latam.support@hikvision.com

Hikvision Turkey
T +90 (216)521 7070- 7074
sales.tr@hikvision.com

Hikvision Malaysia
T +601-7652-2413
sales.my@hikvision.com

Hikvision UK & Ireland
T +01628-902140
sales.uk@hikvision.com

Hikvision South Africa
Tel: +27 (10) 0351172
sale.africa@hikvision.com

Hikvision France
T +33(0)1-85-330-450
info.fr@hikvision.com

Hikvision Kazakhstan
T +7-727-9730667
nikia.panfilov@hikvision.ru

Hikvision Vietnam
T +84-974270888
sales.vt@hikvision.com

Hikvision UAE
T +971-4-4432090
salesme@hikvision.com

Hikvision Singapore
T +65-6684-4718
sg@hikvision.com

Hikvision Spain
T +34-91-737-16-55
info.es@hikvision.com

Hikvision Tashkent
T +99-87-1238-9438
uzb@hikvision.ru

Hikvision Hong Kong
T +852-2151-1761
info.hk@hikvision.com

Hikvision Russia
T +7-495-669-67-99
saleru@hikvision.com

Hikvision Korea
T +82-(0)31-731-8817
sales.korea@hikvision.com

Hikvision Poland
T +48-22-460-01-50
info.pl@hikvision.com

Hikvision Indonesia
T +62-21-2933759
Sales.Indonesia@hikvision.com

Hikvision Colombia
sales.colombia@hikvision.com

© Hikvision Digital Technology Co., Ltd. 2019 | Data subject to change without notice |