DATASHEET

AXIS M10 Network Camera Series

Smallest and smartest network cameras from the market leader.

- > Easy and flexible
- > PIR sensor and LED
- > Microphone, speaker, I/O
- > Wireless
- > Memory card slot
- > HDMI™ output

AXIS M10 Series offers small and smart cameras, ideal for securing locations such as small businesses, boutiques, restaurants, hotels or residences.

AXIS M10 Network Cameras with their functional and smart design offer a high quality yet affordable video surveillance solution. Using progressive scan technology, the cameras provide SVGA, HDTV 720p or 1080p video.

AXIS M10 Series is designed for easy and flexible installation. AXIS M1004-W, AXIS M1033-W and AXIS M1034-W offer the choice of either a wireless or a wired connection to the network. These models feature Wi-Fi Protected Setup protocol, which simplifies the process of configuring logical security on wireless networks. AXIS M1025 and AXIS M1054 can be powered either over Ethernet or by power supply.

AXIS M1025 delivers full HDTV 1080p resolution at 30 fps and features an HDMI™ output (Micro) for public view monitoring. AXIS M1033-W, AXIS M1034-W and AXIS M1054 feature an integrated PIR sensor for detecting movement even in the dark, and a white LED for illuminating the scene at an event.

AXIS M1033-W, AXIS M1034-W and AXIS M1054 provide two-way audio support with built-in microphone and speaker, allowing remote listening in on an area, as well as communication with individuals directly or using uploaded or recorded audio clips.

HDTV NETWORK VIDEO

ONVIF

Model Specifications – AXIS M10 Network Camera Series

	Resolution	Adjustable focus	Audio	Wi-Fi Protected Setup™ PBC compatible	Memory card	PIR sensor White LED	I/O ports	HDMI™ output (Micro)	PoE support
AXIS M1004–W	1280x800	✓		IEEE 802.11b/g/n			✓		
AXIS M1013	800x600	✓			✓				
AXIS M1014	1280x800	✓			✓				
AXIS M1025	1920x1080	✓			✓			✓	✓
AXIS M1033–W	800x600	✓	✓	IEEE 802.11b/g/n		✓	✓		
AXIS M1034–W	1280x800	✓	✓	IEEE 802.11b/g/n		✓	✓		
AXIS M1054	1280x800		✓			✓	✓		✓

The terms HDMI and HDMI High-Definition Multimedia Interface, and the HDMI Logo are trademarks or registered trademarks of HDMI Licensing LLC in the United States and other countries.

Dimensions

1. AXIS M1004-W, AXIS M1013, AXIS M1014, AXIS M1033-W, AXIS M1034-W, AXIS M1054

2. AXIS M1025

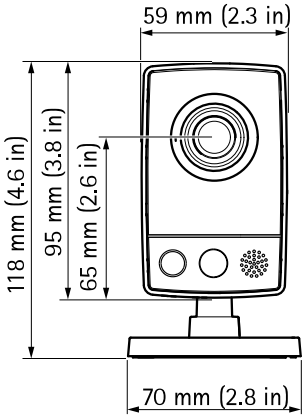

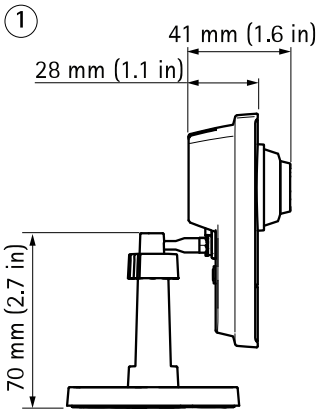

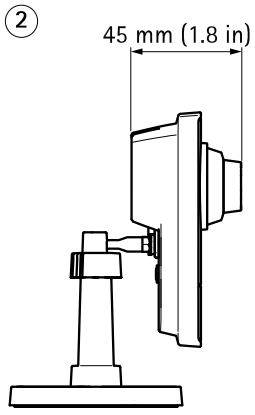

Optional accessories

1. *AXIS PoE Active Splitter 5 V AF (all models except AXIS M1025/M1054)*
2. *AXIS T8414 Installation Display*
3. *Scan for a complete list of accessories http://www.axis.com/products/cam_m1025/a*

Technical Specifications - AXIS M10 Network Camera Series

Models	**AXIS M1004-W:** Wired and wireless: 1MP/HDTV 720p **AXIS M1013:** Wired: SVGA **AXIS M1014:** Wired: 1 MP/HDTV 720p **AXIS M1033-W:** Wired and wireless: SVGA **AXIS M1034-W:** Wired and wireless: 1 MP/HDTV 720p **AXIS M1025:** Wired, Power over Ethernet: 2 MP/HDTV 1080p **AXIS M1054:** Wired, Power over Ethernet: 1 MP/HDTV 720p

Camera

Image sensor	**AXIS M1004–W/M1013/M1014/M1033-W/M1034-W/M1054:** 1/4" progressive scan RGB CMOS **AXIS M1025:** 1/2.7" progressive scan RGB CMOS
Lens	**AXIS M1013/M1033-W:** 2.8 mm: 67° view[a], F2.0, fixed iris, adjustable focus **AXIS M1004–W/M1014/M1034-W:** 2.8 mm: 80° view[a], F2.0, fixed iris, adjustable focus **AXIS M1025:** 3.6 mm: 94° view[a], F2.8, fixed iris, adjustable focus **AXIS M1054:** 2.8 mm: 84° view[a], F2.0, fixed iris, fixed focus
Light sensitivity	**AXIS M1004–W/M1013/M1014/M1033-W** and **AXIS M1034-W/M1054:** 1.2–100000 lux, F2.0 **AXIS M1025:** 1.5–100000 lux, F2.8 **AXIS M1033-W/M1034-W/M1054:** 0 lux with illumination LED on
Shutter time	**AXIS M1004–W/M1013/M1014/M1025/M1033-W/M1034-W:** 1/8000 s to 1/6 s **AXIS M1054:** 1/25000 s to 1/6 s
Pan/Tilt/Zoom	Digital PTZ

Video

Video compression	**AXIS M1004–W/M1013/M1014/M1025/M1033-W/M1034-W:** H.264 Main Profile (MPEG-4 Part 10/AVC), Motion JPEG **AXIS M1054:** H.264 Baseline (MPEG-4 Part 10/AVC), Motion JPEG
Resolutions	**AXIS M1013/M1033-W:** 800x600 to 320x240 **AXIS M1004–W/M1014/M1034-W:** 1280x800 to 320x240 **AXIS M1025:** 1920x1080 (HDTV 1080p) to 320x240 **AXIS M1054:** 1280x800 to 160x90
Frame rate	H.264: 30 fps in all resolutions Motion JPEG: 30 fps in all resolutions (performance may be reduced in wireless mode) **AXIS M1025, H.264:** 25/30 fps with power line frequency 50/60 Hz **AXIS M1025, Motion JPEG:** 15 fps with power line frequency 50/60 Hz
Video streaming	Multiple, individually configurable streams in H.264 and Motion JPEG Controllable frame rate and bandwidth, VBR/CBR H.264, MPEG-4 Part 2
Image settings	Compression, Color, Brightness, Sharpness, Contrast, White balance, Exposure value, Backlight compensation, Rotation including Corridor Format, Text and image overlay, Privacy mask, Mirroring **AXIS M1004-W:** Wide Dynamic Range - dynamic contrast **AXIS M1025:** Wide Dynamic Range - dynamic contrast, Rotation: Only 180° for video stream over HDMI, Text and image overlay and Privacy mask are not available with HDMI (HDTV 720p capture mode) **AXIS M1054:** Exposure control, Exposure zones

55974/EN/M2.6/022014

Audio	
Audio streaming	**AXIS M1033-W/M1034-W/M1054:** Two-way
Audio compression	**AXIS M1033-W/M1034-W/M1054:** AAC-LC 8/16 kHz, G.711 PCM 8 kHz, G.726 ADPCM 8 kHz Configurable bit rate
Audio input/output	**AXIS M1033-W/M1034-W/M1054:** Built-in microphone (can be disabled) and speaker
Network	
Wireless interface	Internal antenna **AXIS M1004-W/M1033-W/M1034-W:** IEEE 802.11b/g/n
Security	Password protection, IP address filtering, HTTPS[b] encryption, IEEE 802.1X[b] network access control, Digest authentication, User access log **AXIS M1004-W/M1033-W/M1034-W:** WEP 64/128 bit, WPA/WPA2-PSK, WPA, WPA2 Enterprise **AXIS M1004-W/M1033-W/M1034-W:** WLAN pairing button (Wi-Fi Protected Setup™ PBC compatible)
Supported protocols	IPv4/v6, HTTP, HTTPS[b], SSL/TLS[b], QoS Layer 3 DiffServ, FTP, CIFS/SMB, SMTP, Bonjour, UPnP™, SNMPv1/v2c/v3 (MIB-II), DNS, DynDNS, NTP, RTSP, RTP, TCP, UDP, IGMP, RTCP, ICMP, DHCP, ARP, SOCKS
System integration	
Application Programming Interface	Open API for software integration, including VAPIX®; specifications at www.axis.com AXIS Video Hosting System (AVHS) with One-Click Camera Connection ONVIF Profile S; specifications at www.onvif.org **AXIS M1004-W/M1025/M1054:** AXIS Camera Application Platform; specifications at www.axis.com
Intelligent video	Video motion detection, Active tampering alarm **AXIS M1033-W/M1034-W/M1054:** Audio detection **AXIS M1004-W/M1025/M1054:** AXIS Camera Application Platform enabling installation of additional applications
Event triggers	Intelligent video, Edge storage events **AXIS M1004-W:** External input **AXIS M1033-W/M1034-W/M1054:** External input, built-in PIR, audio detection **AXIS M1004-W/M1025/M1054:** AXIS Camera Application Platform enabling installation of additional applications
Event actions	File upload: FTP, HTTP, network share and email Notification: email, HTTP and TCP Pre- and post-alarm video buffering **AXIS M1004-W:** External output activation **AXIS M1013/M1014/M1025:** Video recording to edge storage **AXIS M1033-W/M1034-W/M1054:** External output activation, Video and audio recording to edge storage, Activation of illumination LED, Audio clip playback
Data streaming	Event data
Built-in installation aids	Pixel counter
General	
Casing	Color: White NCS S 1002-B **AXIS M1004-W/M1013/M1014** and **AXIS M1033-W/M1034-W:** Polycarbonate **AXIS M1025/M1054:** Aluminium and polycarbonate
Memory	**AXIS M1004-W/M1013/M1014/M1025/M1033-W/M1034-W:** 256 MB RAM, 128 MB Flash **AXIS M1054:** 128 MB RAM, 128 MB Flash
Power	4.9–5.1 V DC, max. 6.5 W **AXIS M1025:** 4.9–5.1 V DC, max. 2.4 W; Power over Ethernet IEEE 802.3af/IEEE 802.3at Type 1 Class 1 (max. 3.84 W) **AXIS M1054:** Power over Ethernet IEEE 802.3af/IEEE 802.3at Type 1 Class 2 (max. 6.49 W)
Connectors	DC jack, RJ45 10BASE-T/100BASE-TX **AXIS M1004-W/M1033-W/M1034-W/M1054:** 1 alarm input and 1 output **AXIS M1025:** Male RJ45 10BASE-T/100BASE-TX PoE, HDMI (Micro) - Video out compatible with DVI
Edge storage	**AXIS M1013/M1014/M1025:** MicroSD/microSDHC/microSDXC slot supporting memory card up to 64 GB (card not included) **AXIS M1004-W/M1013/M1014/M1025/M1033-W** and **AXIS M1034-W/M1054:** Support for recording to network share (Network Attached Storage or file server)
PIR sensor	**AXIS M1033-W/M1034-W/M1054:** Passive infrared (PIR) motion sensor with configurable sensitivity. Max. range: 6 m (19.7 ft)
Illumination LED	**AXIS M1033-W/M1034-W/M1054:** White illumination LED: 1 W, Class 1M
Operating conditions	**AXIS M1025:** 0 °C to 50 °C (32 °F to 122 °F) **AXIS M1004-W/M1013/M1014/M1033-W** and **AXIS M1034-W/M1054:** 0 °C to 40 °C (32 °F to 104 °F) Humidity 20–80% RH (non-condensing)
Approvals	**AXIS M1013/M1014/M1025/M1054:** EN 55022 Class B, EN 61000-3-2, EN 61000-3-3, EN 55024, FCC Part 15 Subpart B Class B, ICES-003 Class B, VCCI Class B, C-tick CISPR 22, KCC Class B, IEC/EN 60950-1 **AXIS M1004-W/M1033-W/M1034-W:** EN 55022 Class B, EN 61000-3-2, EN 61000-3-3, EN 55024, FCC Part 15 Subpart B Class B and C, ICES-003 Class B, VCCI Class B, C-tick AS/NZS CISPR 22, KCC KN22 Class B, KN24, EN 60950-1, EN 62311, EN 301489-1, EN 301489-17, EN 300328, RSS-210, ANATEL, CNC, NCC, TELEC, AS/NZS 4771, IEC/EN/UL 60950-1 **AXIS M1033-W/M1034-W:** IEC/EN 62741 risk group 1 **AXIS M1004-W:** SRRC **Power supply:** EN 60950-1, cCSAus
Weight	**AXIS M1004-W:** 111 g (0.24 lb) **AXIS M1013/M1014:** 110 g (0.24 lb) **AXIS M1025:** 144 g (0.32 lb) **AXIS M1033-W/M1034-W:** 116 g (0.26 lb) **AXIS M1054:** 156 g (0.34 lb)
Included accessories	Power supply, Stand and clamp, Installation Guide, Installation and Management Software CD, Windows decoder 1-user license **AXIS M1033-W/M1034-W/M1054:** Extension for stand: 100 mm (4.0 in)
Video management software	AXIS Camera Companion (included), AXIS Camera Station and video management software from Axis' Application Development Partners (not included). For more information, see www.axis.com/products/video/software
Warranty	Axis 1-year warranty and AXIS Extended Warranty option see www.axis.com/warranty

a. *Horizontal angle of view*
b. *This product includes software developed by the OpenSSL Project for use in the OpenSSL Toolkit (http://www.openssl.org/), and cryptographic software written by Eric Young (eay@cryptsoft.com).*

More information is available at www.axis.com

©2014 Axis Communications AB. AXIS COMMUNICATIONS, AXIS, ETRAX, ARTPEC and VAPIX are registered trademarks or trademark applications of Axis AB in various jurisdictions. All other company names and products are trademarks or registered trademarks of their respective companies. We reserve the right to introduce modifications without notice.

AXIS COMMUNICATIONS