WiseNet Lite

SNO-L6083R

2Megapixel Full HD Weatherproof Network IR Camera

Key Features

- Max. 2M (1920 x 1080) resolution
- 2.8 ~ 12mm (4.3x) varifocal lens
- 0.095Lux@F1.4 (Color), 0Lux@F1.4 (B/W : IR LED on)
- 30fps@all resolutions (H.264)
- H.264, MJPEG dual codec, Multiple streaming
- Motion detection, Tampering
- micro SD/SDHC memory slot, PoE
- IR viewable length 20m, IP66, IK10
- Hallway view support (Rotate 90˚/270˚)
- LDC support (Lens Distortion Correction)

Dimensions

Unit : mm (inch)

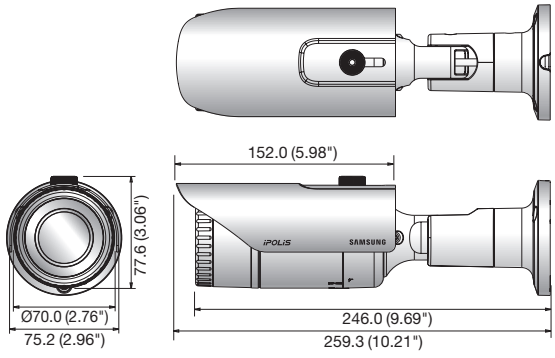

	SNO-L6083RN/P
VIDEO	
Imaging Device	1/2.9" 2.19M CMOS
Total Pixels	2,000(H) x 1,121(V)
Effective Pixels	1,984(H) x 1,105(V)
Scanning System	Progressive
Min. Illumination	Color : 0.095Lux (1/30sec, F1.4), 0.002Lux (2sec, F1.4) B/W : 0Lux (IR LED on)
LENS	
Focal Length (Zoom Ratio)	2.8 ~ 12mm (4.3x) varifocal
Max. Aperture Ratio	F1.4
Angular Field of View	H : 103.8˚(Wide) ~ 32.4˚(Tele) / V : 53.7˚(Wide) ~ 18.4˚(Tele) / D : 121.9˚(Wide) ~ 37.1˚(Tele)
Min. Object Distance	0.5m (1.64ft)
Focus Control	Manual
Lens Type	DC auto iris
Mount Type	Board type
OPERATIONAL	
IR Viewable Length	20m (65.62ft)
Camera Title	Off / On (Displayed up to 15 characters)
Day & Night	True Day & Night
Backlight Compensation	Off / BLC
Contrast Enhancement	SSDR (Samsung Super Dynamic Range) (Off / On)
Digital Noise Reduction	SSNR (Off / On)
Motion Detection	Off / On (4ea rectangular zones)
Privacy Masking	Off / On (6ea rectangular zones)
Gain Control	Off / Low / Middle / High
White Balance	ATW / AWC / Manual / Indoor / Outdoor
LDC (Lens Distortion Correction)	Off / On (5 levels with min / max)
Electronic Shutter Speed	Minimum / Maximum / Anti flicker
Flip / Mirror	Flip / Mirror / Hallway view
Intelligent Video Analytics	Motion detection with metadata, Tampering
Alarm Triggers	Motion detection, Tampering detection, SD card error, NAS error
Alarm Events	File upload via FTP and E-mail, Local storage recording at event, Notification via E-mail
NETWORK	
Ethernet	RJ-45 (10/100BASE-T)
Video Compression Format	H.264, MJPEG
Resolution	1920 x 1080, 1280 x 960, 1280 x 720, 1024 x 768, 800 x 600, 720 x 576, 640 x 480, 320 x 240
Max. Framerate	H.264 : Max. 30fps at all resolutions MJPEG : Max. 1fps at 1920 x 1080, 1280 x 960, 1280 x 720, 1024 x 768, Max. 15fps at other resolution
Video Quality Adjustment	H.264 : Target bitrate level control, MJPEG : Quality level control
Bitrate Control Method	H.264 : CBR or VBR, MJPEG : VBR
Streaming Capability	Multiple streaming (Up to 3 profiles)
Audio I/O	Line in
Audio Compression Format	G.711 u-law / G.726 selectable G.726 (ADPCM) 8KHz, G.711 8KHz, G.726 : 16Kbps, 24Kbps, 32Kbps, 40Kbps
Audio Communication	Uni-directional audio
IP	IPv4, IPv6
Protocol	TCP/IP, UDP/IP, RTP(UDP), RTP(TCP), RTCP, RTSP, NTP, HTTP, HTTPS, SSL, DHCP, PPPoE, FTP, SMTP, ICMP, IGMP, SNMPv1/v2c/v3(MIB-2), ARP, DNS, DDNS, QoS, PIM-SM, UPnP, Bonjour
Security	HTTPS(SSL) login authentication, Digest login authentication IP address filtering, User access log, 802.1x authentication
Streaming Method	Unicast / Multicast
Max. User Access	6 users at unicast mode
Storage	micro SD/SDHC max. 32G, NAS - Motion images recorded in the SD memory card can be downloaded - Manual recording at local PC
Application Programming Interface	ONVIF Profile S, G, SUNAPI (HTTP API)
Webpage Language	English, French, German, Spanish, Italian, Chinese, Korean, Russian, Japanese, Swedish, Danish, Portuguese, Turkish, Polish, Czech, Rumanian, Serbian, Dutch, Croatian, Hungarian, Greek, Norwegian, Finnish
Web Viewer	Supported OS : Windows XP / VISTA / 7 / 8 / 8.1, MAC OS X 10.7 ~ 10.10 Supported Browser : Microsoft Internet Explorer (Ver. 8 ~ 11), Mozilla Firefox (Ver. 9 ~ 35), Google Chrome (Ver. 15 ~ 40), Apple Safari (Ver. 8.0.2(Mac OS X 10.10), 7.0.6(Mac OS X 10.9), 6.0.2 (Mac OS X 10.8, 10.7 only), 5.1.7) * Mac OS X only
Central Management Software	SmartViewer
ENVIRONMENTAL	
Operating Temperature / Humidity	-30°C ~ +55°C (-22°F ~ +131°F) / Less than 90% RH *Start up should be done at above -20°C (-4°F)
Storage Temperature / Humidity	-30°C ~ +60°C (-22°F ~ +140°F) / Less than 90% RH
Ingress Protection	IP66
Vandal Resistance	IK10
ELECTRICAL	
Input Voltage / Current	PoE (IEEE802.3af, Class2)
Power Consumption	Max. 5.9W
MECHANICAL	
Color / Material	Dark gray / Metal
Dimensions (WxH)	Ø70.0 x 246.0mm (Ø2.76" x 9.69") (Without sunshield)
Weight	700g (1.54 lb)

* Data recorded on an SD memory card may be lost or damaged by data access during power-off, mechanical shock, memory card detachment, or other operations. Data loss or damage can also occur when a memory card reaches end of life, which varies according to operational conditions. No guarantee is given against damage (including passive damage).

* The latest product information / specification can be found at www.samsungsecurity.com

FC | c UL us LISTED | CE | FIRST EDITION 03-2015

SAMSUNG TECHWIN