Temporary version , only for reference.

DS-2TD6135-75B2L

Observable Thermal + Optical Bi-spectrum Network PTZ Camera

Smart Function (IR)

Smart Tracking

- Panorama Tracking, Event Tracking, Multi-Scenario Patrol Tracking and so on;
- Thermal and Optical Bi-spectrum linked Smart Tracking.

Smart Detection

- Intrusion Detection, Line Crossing, Region Entrance Detection, Region Exiting Detection, Audio Exception Detection, Detection of High Temperature and so on.

Smart Record

- ANR

Smart Image Enhancement

- Low bitrate and SVC self-adaptive.

Smart Alarm

- The network disconnection, IP Address conflict, HDD Full, HDD error, Illegal login, Exception Detection and so on.

- High-performance 1/2.8”CMOS
- Visible Light: 1920 X 1080; Thermal: 384 X288
- Support Low illumination
- Support H.264 Video Compression
- 32X Optical Zoom and 16X Digital Zoom lens
- WDR and 3D DNR
- Up to 300 Presets
- Patrol Scan and Pattern Scan
- Up to 500m IR distance
- Auto adjust IR Intensity and Angle
- IP66 Protection Level

Function

System

- Support 3D Positioning. Support clicking to track and clicking to zoom in via Client/IE;
- Support Micro SD/SDHC/SDXC Storage Card;
- Open-ended API. Support HIKVISION SDK, ONVIF (Open Network Video Interface Forum), CGI (Common Gateway Interface) and PSIA (Physical Security Interoperability Alliance);
- Support PAL and NTSC;
- Multi-language Menu and Operation Tip;
- Support Double Backup to protect the data.
- Function of Power-off Memory: Restore PTZ & Lens Status after rebooting;
- Lightning Protection, Surging Protection and Voltage Transient Protection;
- IP66 protection level (Outdoor);
- Support Scheduled Tasks of Preset/Aux Output/Multi-scan Mode;
- Park Function: Auto calling Preset/Pattern Scan/Patrol Scan after idle (including the idle after reboot);
- IEEE 802.1X Access Control and IP address Filtering;
- Support NAS and ANR, up to 8 NAS;
- Support the three-level user authentication management, the authenticated user and password and HTTPS Encryption;
- Two channels accessed by single IP address;
- Support H.264/MJPEG/MPEG4 (H.264: Baseline/Main/High Profile); support Configuration of Multi-level Video Quality; support Real-Time Output Resolution: HDTV 1080p (SMPTE274M standard), 960p and HDTV 720p (SMPTE296M standard).

Visible Light Module

- High-Performance 1/2.8”CMOS, up to 1920X1080;
- Support 32X Optical Zoom (Lens: 8 – 250mm) and 16X Digital Zoom;
- Support Auto-Iris, Auto Focus, AWB, BLC, WDR and 3D DNR;
- Support Polygonal Private Mask for multiple regions, multiple colors and Mosaic;
- Support Defog, HLC, Electronic Image Stabilizer and Smart IR;
- ROI Enhancement Encoding.

Thermal

- Passive Infrared Thermal Technology;
- Resolution of 384 X 288: High Sensitivity Detector, Contrast Adjustment;
- Support Shutter Adjustment in various modes and Alternative AGC Mode;
- Support 3D DNR, 14 Pseudo Colors and Image Details Enhancement;
- Support Mirror Image;
- Support Local Video Output;
- Thermal Len (75mm Fixed Focus): Support 1X, 2X and 4X Digital Zoom.

External Interface

- Support Network Signal Output and Analog Signal Output. Support PTZ speed control;
- Support up to 7-ch Alarm Input and 2-ch Alarm Output;
- Support 1-ch Audio Input and 1-ch Audio Output;
- Support Local Analog Output, 1.0V [p-p]/75Ω, PAL or NTSC, BNC;
- Support RS485, Half-Duplex. HIKVISION, PELCO-P and PELCO-D self-adaptive;
- Support Wiper in Visible Light Module. Adopt Automobile Windscreen Wiper.

PTZ

- 360° endless pan range; +40° ~ -90° tilt range;
- 0.1°~ 110°/s Manual Pan Speed and 0.1°~ 50°/s Manual Tilt Speed;
- Support up to 300 presets.
- Support up to 8 Patrol Scans. up to 32 presets per patrol;
- Support up to 4 Pattern Scans, with the recording time no less than 10 minutes per pattern;
- Proportional zoom function and park action.

Specifications

Model	**DS-2TD6135-75B2L**	
Thermal Module		
Image Sensor	Vanadium Oxide Uncooled Focal Plane Detectors	
Max. Resolution	384 X 288	
Response Waveband	From 8μm to 14 μm	
NETD	< 50mk(@25°C,F#=1.0)	
Reference	Human: 1.8m X 0.5m	Vehicle: 1.4m X 4.0m
Focal Length (Lens)	75mm	
MRAD	0.33	
Detection Range (Vehicles)	4600	
Detection Range (Human)	1500	
Recognition Range (Vehicles)	1150	
Recognition Range (Human)	375	
Identification Range (Vehicles)	575	
Identification Range (Human)	188	
Field Angle	7.3° X 5.5°	
F Number	1.0	
Function		
Movement Range	Pan: 360° Continuous Rotate; Tilt: From +40° to -90°	
Pan Speed	Configurable, From 0.1°/s to 110°/s	
Tilt Speed	Configurable, From 0.1°/s to 50°/s	
Proportional Zoom	Support	
Presets	300	
Patrol Scan	8; Up to 32 Presets Per Patrol	
Pattern Scan	4; More Than 10 Minutes Per Pattern	
Power Off Memory	Support	
Park	Preset/Pattern Scan/Patrol Scan/Auto Scan/Tilt Scan/Random Scan/Frame Scan/Panorama Scan	
PT Status	Turn On/Turn Off	
Scheduled Task	Preset/Pattern Scan/Patrol Scan/Auto Scan/Tilt Scan/Random Scan/Frame Scan/Panorama Scan/Doom Reboot/Doom Adjust/Aux Output	
Infrared		
IR Distance	Up to 500m	
IR Intensity and Angle	Auto Adjust	
Network		
Max. Resolution	Visible Light: 1920 X 1080; Thermal:384 X288	
Main Stream	Visible Light: 50Hz:25fps(1920×1080)、25fps(1280×960)、25fps(1280×720) Visible Light: 60Hz:30fps(1920×1080)、30fps(1280×960)、30fps(1280×720) Thermal: 50Hz:25fps(384 X288) or 60Hz:30fps(384 X288)	
Sub Stream	50Hz:25fps(704×576)、25fps(352×288)、25fps(176×144) 60Hz:30fps(704×480)、30fps(352×240)、30fps(176×120) Thermal: 50Hz:25fps(384 X288) or 60Hz:30fps(384 X288)	
Video Compression	H.264 (Baseline/Main/High Profile) /MJPEG/MPEG4	
Audio Compression	G .711u/G.711a/G.722.1/MP2L2/G726/AAC/PCM	
Protocols	IPv4/IPv6,HTTP,HTTPS,802.1x,Qos,FTP,SMTP,UPnP,SNMP,DNS,DDNS,NTP,RTSP,RTCP,RTP,TCP,UDP,IGMP,ICMP,DHCP, PPPoE,Bonjour	
Simultaneous Live View	Up to 20-ch	

User Authentication	Up to 32 users; Three Levels: Administrator, Operator and User
General Function	Authenticated User Name and Password; Bond MAC Address; HTTPS Encryption; IEEE 802.1X Access Control; IP Address Filtering
Integration	
Alarm Input	Up to 7-ch Relay Input (0-5vDC)
Alarm Output	Up to 2-ch; Support Alarm Linkage
Alarm Action	Preset/Patrol Scan/Pattern Scan/SD Card Record/Relay Output
Audio Input	LINE_IN Input/MIC Input; Peak: From 2 to 2.4V[p-p]; Output Impedance: 1KΩ±10%
Audio Output	Linear Level; Impedance: 600Ω
Communication Interface	Built-in RJ45; 10M/100M Ethernet Interface
Onboard Storage	Built-in Micro SD/SDHC/SDXC Card Slot, Up to 64GB; Support Manual/Alarm Recording
Analog Video Output	1.0V [p-p]/75Ω, PAL/NTSC/BNC
RS485	Half-Duplex; HIKVISION, PELCO-P and PELCO-D Self-adaptive
API	Open-ended; Support ONVIF,PSIA and CGI; Support HIKVISION SDK and Third-Party Management Platform
Client	iVMS-4200
Web Browser	IE 7+, Chrome 18+, Firefox 5.0+, Safari 5.02+; Multiple Languages
General	
Menu	English
Power	AC24V, 120W
Work Temperature/Humidity	From -40°C to 60°C ; Humidity: 90% or Less
Protection Level	IP66 Standard; TVS 6000V Lightning Protection, Surge Protection and Voltage Transient Protection

Order Model:

DS-2TD6135-75B2L

Dimensions:

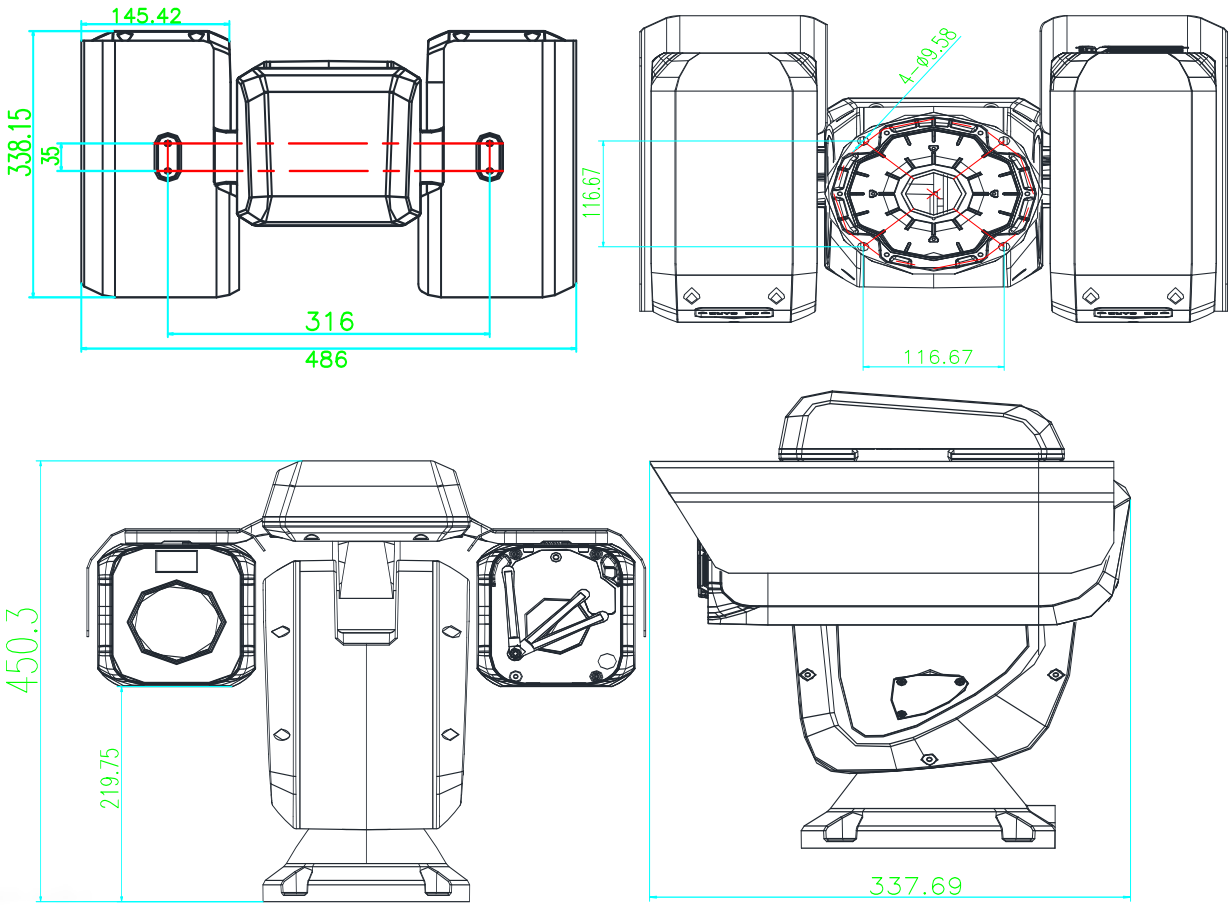

Distributed by

Unit： mm

Headquarters
No.555 Qianmo Road, Binjiang District,
Hangzhou 310051, China
T +86-571-8807-5998
overseasbusiness@hikvision.com

Hikvision USA
T +1-909-895-0400
sales.usa@hikvision.com

Hikvision Europe
T +31-23-5542770
saleseuro@hikvision.com

Hikvision Middle East
T +971-4-8816086
salesme@hikvision.com

Hikvision Russia
T +7-495-669-67-99
saleru@hikvision.com

Hikvision India
T +91-22-28469900
sales@pramahikvision.com

Hikvision Italy
T +39-0438-6902
info.it@hikvision.com

Hikvision France
T +33(0)1-85-330-444
info.fr@hikvision.com

Hikvision Spain
T +34-91-737-16-55
info.es@hikvision.com

Hikvision Poland
T +48-22-460-01-50
poland@hikvision.com

Hikvision UK
T +44-1628-9021-4
support.uk@hikvision.com

Hikvision Singapore
T +65-6684-4718
sg@hikvision.com

Hikvision Oceania
T +61-2-8599-4233
salesau@hikvision.com

Hikvision Hong Kong
T +852-2151-1761

Hikvision Canada
T +1-909-895-0400
sales.usa@hikvision.com

© Hikvision Digital Technology Co., Ltd. 2016 | Data subject to change without notice |