DS-2CD4026FWD/P-L
2 MP ANPR Low Light Box Camera with Housing

smart IPC

The ANPR series ultra-low light smart cameras are able to capture vehicle and recognize vehicle number plate of various countries and regions in dim light environment. DS-2CD4026FWD/P-L offers high resolution, 120dB WDR, Auto-iris, PoE, Defog, EIS, 3D DNR, etc., to meet a wide variety of applications.

- 1/1.8" Progressive Scan CMOS
- 1920 × 1080 @ 60fps
- Ultra-low light
- Auto-iris
- Auto Back Focus (ABF)
- 120dB WDR
- Capture rate > 99% (certain countries and regions)
- Recognition rate > 98% (certain countries and regions)
- White light control by photoresistor, and white light remote control by RS-485
- IP66

Function Description

Road Traffic and Vehicle Detection

- Support countries and regions of Mid-East, Africa, Asia-Pacific, America, Europe, Russian-speaking Countries.
- In European and Russian-speaking regions, capture rate exceeds 99%, recognition rate exceeds 98%.

Smart

- Smart recording: Support edge recording and dual-VCA
- Smart encoding: Support low bit rate, low latency, ROI enhance encoding

Image

- 1920 × 1080 @60fps
- Support auto iris, DC-drive
- Support rotate mode, suitable for environment as corridor
- Support target cropping, details can be seen with low bandwidth
- Streaming smoothness setting for different requirements of image quality and fluency
- Support H.264+/H.264/MPEG4/MJPEG video compression, multi-level video quality configuration; support Baseline Profile/Main Profile/High Profile H.264 encoding complexity.
- Multiple OSD color: Black & white self-adaptive; Custom
- 120dB WDR is supportable for backlight environment
- Support defog, BLC, EIS, 3D DNR

System

- Support ONVIF (profile S/profile G), CGI, PSIA, ISAPI protocol
- Support three streams, and Support 20 channels live view at the same time
- Lightning protection, surge protection, voltage transient protection, anti-static protection

Interface

- Support standard 128G microSD/SDHC/SDXC card storage
- Support 10M/100M Ethernet port, RS-485, RS-232
- Support Audio I/O, build-in microphone
- Support Alarm I/O
- Support CVBS analog output (4CIF resolution)

Security

- Support three-level user authentication management, user and password authorization, and IP address filtering
- Support security certificate as HTTPS
- Lock user IP after certain times failed login attempts

Specifications

Camera	
Image Sensor	1/1.8'' Progressive Scan CMOS
Min. Illumination	Color: 0.002 Lux @ (F1.2, AGC ON), B/W: 0.0002 Lux @ (F1.2, AGC ON)
Shutter Speed	1 s – 1/100,000 s, supports slow shutter
Lens	3.8 mm to 16 mm, horizontal field of view: 100.6° to 27.3° 11 mm to 40 mm, horizontal field of view: 35.8° to 11.2° 7 mm to 33 mm, horizontal field of view: 50.5° to 16.4°
Lens Mount	C/CS mount
Auto-iris	DC drive
Day & Night	IR cut filter with auto switch
Digital Noise Reduction	3D DNR
WDR	120dB
Compression Standard	
Video Compression	Main stream: H.264/MPEG4 Sub stream: H.264/MPEG4/MJPEG Third stream: H.264/MPEG4/MJPEG
H.264 Type	Baseline Profile/Main Profile/High Profile
H.264+	Support
Video Bit Rate	32 Kbps – 16 Mbps
Audio Compression	G.711/G.722.1/G.726/MP2L2
Audio Bit Rate	64Kbps (G.711) /16Kbps (G.722.1) /16Kbps (G.726) /32-160Kbps (MP2L2)
Image	
Max. Resolution	1920 × 1080
Main Stream Max. Frame Rate	50Hz: 50fps (1920 × 1080, 1280 × 960, 1280 × 720) 60Hz: 60fps (1920 × 1080, 1280 × 960, 1280 × 720)
Sub Stream Max. Frame Rate	50Hz: 25fps (704 × 576, 640 × 480, 352 × 288) 60Hz: 30fps (704 × 480, 640 × 480, 352 × 240)
Third Stream Max. Frame Rate	50Hz: 25fps (1920 × 1080, 1280 × 960, 1280 × 720, 704 × 576, 640 × 480, 352 × 288) 60Hz: 30fps (1920 × 1080, 1280 × 960, 1280 × 720, 704 × 480, 640 × 480, 352 × 240)
Image Enhancement	BLC /3D DNR/Defog/EIS
Image Setting	Rotate mode, saturation, brightness, contrast, sharpness adjustable by client software or web browser
Region of Interest	Support 4 fixed region for each stream, and dynamic tracking
Target Cropping	Support
Day/Night Switch	Auto/Schedule/Triggered by Alarm In
Picture Overlay	LOGO picture can be overlaid on video with 128 × 128 24bit bmp format
Road Traffic and Vehicle Detection	
Accuracy	**European and Russian-Speaking Regions:** Capture Rate > 99% Recognition Rate > 98%
Vehicle Speed	Support vehicle speed under 160 km/h (99.4 mi/h)
Line number	Up to 4 lines supported. Recommended to set 1 or 2 lines for best performance
Direction	Support capture and recognition of vehicles both approaching and leaving
Whitelist and Blacklist	Up to 2048

Countries and Regions	**Mid-East:** Turkey, United Arab Emirates, Qatar, Iran, Iraq, Morocco, Egypt, Jordan, Kuwait, Saudi Arabia, Tunisia, Palestine, Pakistan **Africa:** South Africa, Kenya, Nigeria, Tanzania, Mauritius **Asia-Pacific:** Australia, Mauritius, New Zealand, Indonesia, Malaysia, Singapore, South Korea, Thailand, Vietnam, the Philippines, Hong Kong, Macao, Taiwan, Burma, Japan, India, Mongolia **America:** United States of America, Colombia, Brazil, Ecuador, Peru, Mexico **Europe:** Slovakia, Italy, Spain, France, Germany, Poland, France, Czech Republic, Netherlands, Denmark, Luxembourg, Greece, Albania, Bosnia and Herzegovina, Ireland, Malta, Sweden, Switzerland, Portugal, Macedonia, Croatia, Finland, United Kingdom, Romania, Serbia, Bulgaria, Norway, Israel, Hungary, Austria, Vatican City State, Cyprus, Iceland, Slovenia, Turkey, Montenegro **Russian-Speaking Countries:** Azerbaijan, Belarus, Kazakhstan, Lithuania, Georgia, Estonia, Latvia, Armenia, Russian Federation, Ukraine, Moldova, Belarus, Turkmenistan, Uzbekistan
Network	
Network Storage	Support microSD/SDHC/SDXC card (128G), local storage and NAS (NFS,SMB/CIFS), ANR
Alarm Trigger	Road traffic, motion detection, video tampering alarm, network disconnected, IP address conflict, illegal login, HDD full, HDD error
Protocols	TCP/IP, ICMP, HTTP, HTTPS, FTP, DHCP, DNS, DDNS, RTP, RTSP, RTCP, PPPoE, NTP, UPnP, SMTP, SNMP, IGMP, 802.1X, QoS, IPv6
General Function	One-key reset, anti-flicker, three streams, heartbeat, password protection, privacy mask, watermark, IP address filter
Standard	ONVIF (PROFILE S, PROFILE G), PSIA, CGI, ISAPI
Interface	
Communication Interface	1 RJ45 10M/100M Ethernet port, 1 RS-485 interface, 1 RS-232 interface
Audio	1-ch 3.5mm audio input(line in/mic in), 1-ch 3.5mm audio output 1 build-in microphone(can be turned off)
Alarm	1 input, 1 output
Video Output	1Vp-p composite output (75 Ω/BNC)
On-board storage	Built-in microSD/SDHC/SDXC slot, up to 128 G
Reset Button	Yes
Audio	
Environment Noise Filtering	Support
Audio I/O	Support
Audio Sampling Rate	16kHz/32kHz/44.1kHz/48 kHz
General	
Operating Conditions	-30 °C to +60 °C (-22 °F to +140 °F), Humidity 95% or less (non-condensing)
Power Supply	24 VAC ± 10%, terminal block
Power Consumption and Current	Camera with 3.8 mm to 16 mm lens and 11 mm to 40 mm lens: 24 VAC, max. 36.9 W, 1.6 A (when white light and fan are working.) Camera with 7 mm to 33 mm lens: 24 VAC, max. 29.7 W, 1.3 A (when white light and fan are working.)
White Light Range	Camera with 3.8 mm to 16 mm lens: up to 50 m Camera with 11 mm to 40 mm lens: up to 100 m Camera with 7 mm to 33 mm lens: up to 80 m
Fan	Support
Ingress Protection	IP66

Dimensions	Camera: 445.3 × 110 × 169.2 mm (17.53” × 4.33” × 6.66”) Package: 683 × 223 × 215 mm (26.89” × 8.78” × 8.46”)
Weight	5500 g (12.1 lb.)

Available Models:

DS-2CD4026FWD/P-L

Dimensions

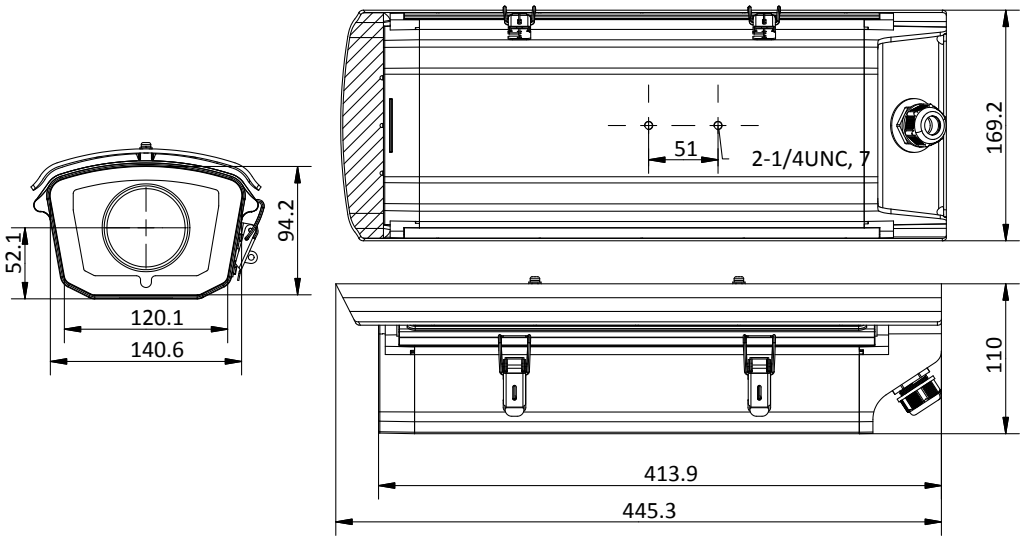

Unit: mm

Accessories

DS-1293ZJ

Wall mount

DS-1214ZJ

Horizontal pole mount

DS-1275ZJ

Vertical pole mount

DS-1269ZJ

Pendant mount

DS-1233ZJ

Column mount

Distributed by

Headquarters
No.555 Qianmo Road, Binjiang District,
Hangzhou 310051, China
T +86-571-8807-5998
overseasbusiness@hikvision.com

Hikvision USA
T +1-909-895-0400
sales.usa@hikvision.com

Hikvision Europe
T +31-23-55-42-770
info.eu@hikvision.com

Hikvision Middle East
T +971-4-8816086
salesme@hikvision.com

Hikvision Russia
T +7-495-669-67-99
saleru@hikvision.com

Hikvision India
T +91-22-28469900
sales@pramahikvision.com

Hikvision Italy
T +39-0438-6902
info.it@hikvision.com

Hikvision France
T +33(0)1-85-330-450
info.fr@hikvision.com

Hikvision Spain
T +34-91-737-16-55
info.es@hikvision.com

Hikvision Poland
T +48-22-460-01-50
poland@hikvision.com

Hikvision UK
T +01628-902140
support.uk@hikvision.com

Hikvision Singapore
T +65-6684-4718
sg@hikvision.com

Hikvision Oceania
T +61-2-8599-4233
salesau@hikvision.com

Hikvision Canada
T +1-909-895-0400
sales.usa@hikvision.com

Hikvision Korea
T +82-31-731-8841
sales.korea@hikvision.com

Hikvision Brazil
T +55 11 3318-0050
Latam.support@hikvision.com

Hikvision Africa
T +27 (10) 0351172
sale.africa@hikvision.com

Hikvision Hong Kong
T +852-2151-1761

© Hikvision Digital Technology Co., Ltd. 2017 | Data subject to change without notice | 05040320170224