# AXIS Q1932-E/Q1932-E PT Mount Thermal Cameras

## Reliable detection and wide range coverage

- VGA thermal imaging
- Bullet-style
- Multiple lens options
- Intelligent video applications included
- Power over Ethernet
- PT Mount model

With superb image quality and a VGA thermal resolution, AXIS Q1932-E and AXIS Q1932-E PT Mount optimize detection performance and perimeter surveillance to meet the most challenging requirements.

The thermal resolution of 640x480 and a range of lenses make it easy to detect and identify people, objects and incidents. Thanks to new image processing algorithms AXIS Q1932-E/Q1932-E PT Mount cameras offer improved image contrast while keeping noise levels low without adding blur and ghost effects.

Since thermal cameras are less sensitive to problems with light conditions and shadows, they can achieve higher accuracy and less false alarms than conventional cameras in most applications. Hence, enhancing the possibility to efficiently use intelligent video applications.

AXIS Q1932-E PT Mount offers the possibility of mounting the camera on a pan/tilt motor to increase installation flexibility.

These bullet-style cameras are outdoor-ready with IP66 rating and they are designed to withstand harsh weather conditions. AXIS Q1932-E and AXIS Q1932-E PT Mount operate in temperatures from -40 °C to 60 °C (-40 °F to 140 °F) using Power over Ethernet (IEEE 802.3af), making the installation easy and cost-effective.

*AXIS Q1932-E PT Mount*

# Range Chart

## Wide range coverage for AXIS Q1932-E & AXIS Q1932-E PT Mount

| | Focal length | Viewing angle | Human: 1.8 x 0.5 m<br>Critical dimension: 0.75 m | | Vehicle: 1.4 x 4.0 m<br>Critical dimension: 2.3 m | |
|---|---|---|---|---|---|---|
| | mm | Horizontal | meters | yards | meters | yards |
| Detection (1.5 pixels on target)<br>An observer can see an object | | | | | | |
| | 10 | 57° | 320 | 350 | 990 | 1083 |
| | 19 | 32° | 580 | 634 | 1800 | 1968 |
| | 35 | 18° | 1050 | 1148 | 3200 | 3500 |
| | 60 | 10° | 1800 | 1968 | 5500 | 6015 |
| Recognition (6 pixels on target)<br>An observer can distinguish an object | | | | | | |
| | 10 | 57° | 80 | 87 | 250 | 273 |
| | 19 | 32° | 150 | 164 | 440 | 481 |
| | 35 | 18° | 260 | 284 | 800 | 875 |
| | 60 | 10° | 440 | 481 | 1350 | 1476 |
| Identification (12 pixels on target)<br>An observer can distinguish a specific object | | | | | | |
| | 10 | 57° | 40 | 44 | 125 | 136 |
| | 19 | 32° | 75 | 82 | 220 | 240 |
| | 35 | 18° | 130 | 142 | 400 | 437 |
| | 60 | 10° | 220 | 240 | 680 | 744 |

*The ranges are calculated according to Johnson's criteria and vary in different weather conditions.*

### Environmental considerations

Johnson's criteria assume ideal conditions. The weather conditions at site will affect the thermal energy emitted from the object and decrease the effective detection range. The detection range in the tables above is based on a temperature difference of 2 °C between the targeted object and the background. However, weather conditions such as rain, snow and fog will attenuate the radiated energy from the object since the heat radiation from the object is scattered when it hits particles in the air. To avoid performance and reliability problems, the camera should always be tested in its intended environment.

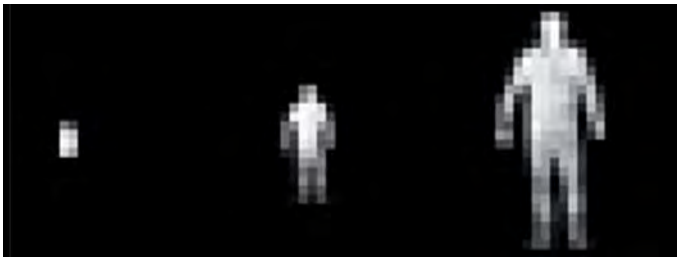

*The difference in number of pixels between detection, recognition and identification illustrated with a human target.*

### Use of intelligent applications

The sensor in a thermal camera reacts to differences in thermal energy. Thus, the sensor is less sensitive to changing light conditions, darkness and other challenging conditions. This makes thermal cameras a perfect platform to combine with intelligent video applications to build more efficient 24/7 surveillance systems. Through our Application Development Partner Program Axis can offer the widest range of third party applications available.

Integrated with intelligent video applications such as video motion detection or tripwire, the camera can automatically trigger an alert to the operator. To maximize performance of the application and safeguard reliable operation 6 pixels across the object is recommended and the surrounding environment always needs to be considered.

## Dimensions AXIS Q1932-E

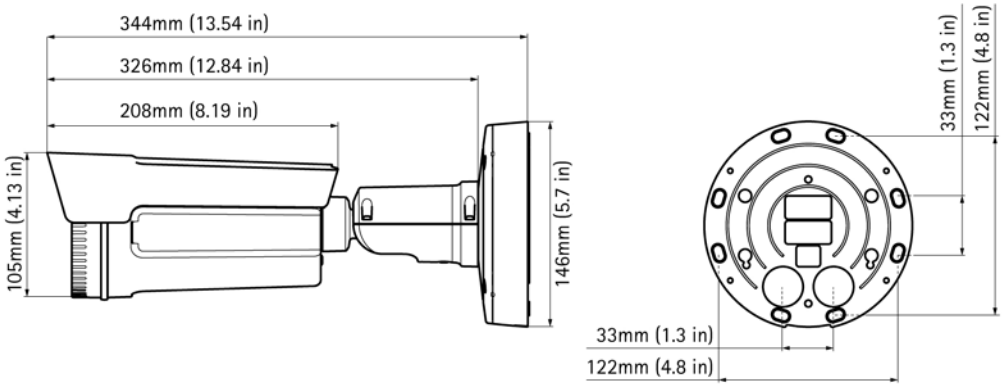


## Dimensions AXIS Q1932-E PT Mount

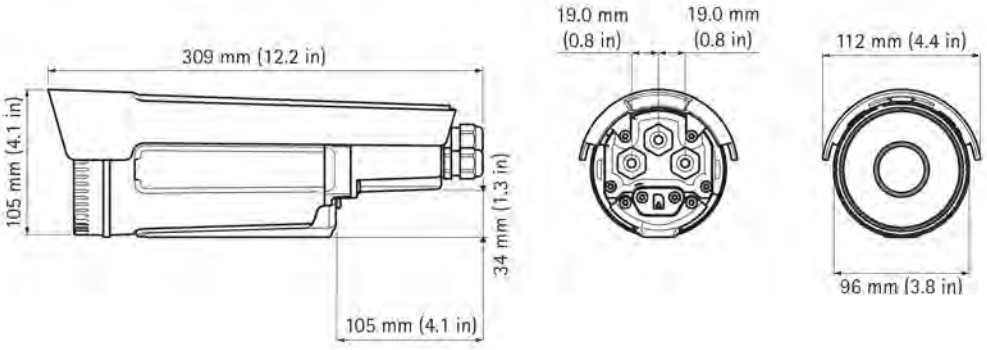


## Optional accessories

**AXIS Q1932-E**

*1. AXIS T98A17-VE*

*2. AXIS T94G01P*

*3. AXIS T91A47*

*4. AXIS Multicable A I/O Audio 5m*

**AXIS Q1932-E PT Mount**

*1. AXIS YP3040 Pan-Tilt Motor*

*2. AXIS YP3040 Wall Bracket*

*3. AXIS T8310 Control Board*

*4. Scan for a complete list of accessories*
*www.axis.com/products/q19_series/*

**AXIS Q1932-E & Q1932-E PT Mount**

*1. Axis PoE Midspans*

*2. AXIS T8129*

*3. AXIS T8640*

*4. AXIS T8604*

57810/EN/M3.2/092014

# Technical Specifications - AXIS Q1932-E/Q1932-E PT Mount

| | |
|---|---|
| **Models** | **AXIS Q1932-E**<br>**AXIS Q1932-E PT Mount**<br>Lens models 10 mm, 19 mm, 35 mm and 60 mm |
| **Camera** | |
| **Image sensor** | Uncooled Micro bolometer 640x480, pixel pitch: 17µm |
| **Lens** | 10 mm: 57° view[a], F1.2<br>19 mm: 32° view[a], F1.0<br>35 mm: 18° view[a], F1.2<br>60 mm: 10° view[a], F1.25 |
| **Sensitivity** | NETD < 70 mK |
| **Pan/Tilt/Zoom** | **AXIS Q1932-E PT Mount:** Preset positions, Guard tour, Driver selection, Control queue |
| **Video** | |
| **Video compression** | H.264 (MPEG-4 Part 10/AVC), H.264 Main and Baseline Profile<br>Motion JPEG |
| **Resolutions** | Sensor is 640x480. Image can be scaled up to 800x600 (SVGA) |
| **Frame rate** | Up to 30 fps within EU, Norway, Switzerland, Canada, USA, Japan, Australia, New Zealand<br>Up to 8.3 fps in other countries[b] |
| **Video streaming** | At least three H.264 and Motion JPEG streams using the same palette, simultaneous and individually configured in max. resolution at 30 fps<br>Controllable frame rate and bandwidth, VBR/CBR H.264 |
| **Image settings** | Compression, Brightness, Contrast, Exposure control, Rotation, Mirroring of images, Multiple palettes, Text and image overlay, Privacy mask<br>**AXIS Q1932-E:** Axis' Corridor Format |
| **Audio** | |
| **Audio streaming** | **AXIS Q1932-E:** Two-way, full duplex |
| **Audio compression** | **AXIS Q1932-E:** AAC LC 8/16 kHz, G.711 PCM 8 kHz, G.726 ADPCM 8 kHz<br>Configurable bit rate |
| **Audio input/output** | **AXIS Q1932-E:** External microphone or line input, line output |
| **Network** | |
| **Security** | Password protection, IP address filtering, HTTPS[c] encryption, IEEE 802.1X[c] network access control, Digest authentication, User access log |
| **Supported protocols** | IPv4/v6, HTTP, HTTPS[c], SSL/TLS[c], QoS Layer 3 DiffServ, FTP, CIFS/SMB, SMTP, Bonjour, UPnP™, SNMPv1/v2c/v3 (MIB-II), DNS, DynDNS, NTP, RTSP, RTP, TCP, UDP, IGMP, RTCP, ICMP, DHCP, ARP, SOCKS, SSH |
| **System integration** | |
| **Application Programming Interface** | Open API for software integration, including VAPIX® and AXIS Camera Application Platform; specifications at www.axis.com<br>AXIS Video Hosting System (AVHS) with One-Click Camera Connection<br>ONVIF Profile S; specification at *www.onvif.org* |
| **Intelligent video** | Video motion detection, Cross line detection, Shock detection, AXIS Camera Application Platform enabling installation of additional applications<br>**AXIS Q1932-E:** Audio detection |
| **Event triggers** | Intelligent video, Temperature, External input, Time scheduled, Shock detection, Edge storage events<br>**AXIS Q1932-E:** Audio<br>**AXIS Q1932-E PT Mount:** PTZ preset |
| **Event actions** | File upload: FTP, HTTP, network share and email<br>Notification: email, HTTP and TCP<br>External output activation<br>Pre- and post-alarm video buffering<br>Video recording to edge storage<br>**AXIS Q1932-E:** Audio recording to edge storage<br>**AXIS Q1932-E PT Mount:** PTZ preset, Guard tour |
| **Data streaming** | Event data |
| **General** | |
| **Casing** | IP66-rated metal casing (Aluminium) with integrated dehumidifying membrane and a germanium window<br>Color: White NCS S 1002-B |
| **Memory** | 256 MB RAM, 128 MB Flash |
| **Power** | Power over Ethernet IEEE 802.3af/802.3at Type 1 Class 3, max. 10 W<br>8-28 V DC, max. 11 W or 20-24 V AC 50-60 Hz, max. 15 VA, power supply not included |
| **Connectors** | RJ45 10BASE-T/100BASE-TX PoE, terminal block for power<br>**AXIS Q1932-E:** Eight circuit PCB header for two configurable inputs/outputs and audio<br>**AXIS Q1932-E PT Mount:** RS485/RS422 for pan/tilt control |
| **Edge storage** | microSD/microSDHC/microSDXC slot supporting memory card up to 64 GB (card not included)<br>Support for recording to dedicated network-attached storage (NAS) |
| **Operating conditions** | -40 °C to 60 °C (-40 °F to 140 °F)<br>Humidity 10-100% RH (condensing) |
| **Approvals** | EN 55022 Class A, EN 50121-4, EN 55024, EN 61000-3-2, EN 61000-3-3, EN 61000-6-1, EN 61000-6-2, FCC Part 15 Subpart B Class A, ICES-003 Class A, VCCI Class A, C-tick AS/NZS CISPR22 Class A, KCC KN22 Class A, KN24, IEC/EN/UL 60950-1, IEC/EN/UL 60950-22, EN 50581, IEC 60529 IP66, NEMA 250 Type 4X, IEC 60068-2-1, IEC 60068-2-2, IEC 60068-2-6 Class 4M4, IEC 60068-2-27, IEC 60068-2-52, IEC 60721-3-4 Class 4K3 |
| **Weight** | **AXIS Q1932-E 10 mm:** 2000 g (4.4 lb)<br>**AXIS Q1932-E 19 mm:** 2000 g (4.4 lb)<br>**AXIS Q1932-E 35 mm:** 2100 g (4.6 lb)<br>**AXIS Q1932-E 60 mm:** 2200 g (4.9 lb)<br>**AXIS Q1932-E PT Mount 10 mm:** 1800 g (4.0 lb)<br>**AXIS Q1932-E PT Mount 19 mm:** 1800 g (4.0 lb)<br>**AXIS Q1932-E PT Mount 35 mm:** 1900 g (4.2 lb)<br>**AXIS Q1932-E PT Mount 60 mm:** 2000 g (4.4 lb) |
| **Included accessories** | Installation Guide, Installation and Management Software CD, Windows decoder 1-user license, AXIS Cross Line Detection license, AXIS Video Motion Detection 2.1, Torx T20 screw driver<br>**AXIS Q1932-E:** Wall and ceiling mount bracket, Pipe converter for US, RJ45 network cable 5 m (16 ft) |
| **Video management software** | AXIS Camera Companion (included), AXIS Camera Station and video management software from Axis' Application Development Partners (not included). For more information, see *www.axis.com/products/video/software* |
| **Warranty** | Axis 3-year warranty and AXIS Extended Warranty option,see *www.axis.com/warranty* |

a. *Horizontal angle of view*
b. *Frame rate above 9 fps may be subject to export control regulations*
c. *This product includes software developed by the OpenSSL Project for use in the OpenSSL Toolkit (http://www.openssl.org/), and cryptographic software written by Eric Young (eay@cryptsoft.com).*

**More information is available at www.axis.com**

©2014 Axis Communications AB. AXIS COMMUNICATIONS, AXIS, ETRAX, ARTPEC and VAPIX are registered trademarks or trademark applications of Axis AB in various jurisdictions. All other company names and products are trademarks or registered trademarks of their respective companies. We reserve the right to introduce modifications without notice.