Vari-Focal Day Type

3MP

YV2.8x2.8SA-SA2

Applicable camera (model): 1 | 2/3 | 1/2 | **1/3** | **1/4**

2.8 ×

Applicable to 1/3

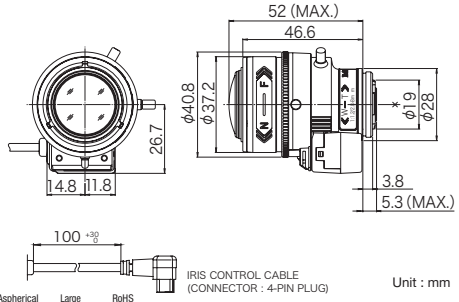

Unit : mm

Full HD 3MP

Vari-Focal: VARI | Wide Angle: WIDE | DC Auto Iris: DC | CS Mount: CS-mt | Metal Mount: METAL | ND Filter: ND | Long Cable: 230 | Aspherical Lens: AT | Large Aperture Ratio: F1.2 | RoHS Compliant: RoHS

Focal Length (mm)			2.8 - 8 (2.8x)
Iris Range			F1.2 - T360(Equivalent to F360)
Operation	Zoom		Manual
	Focus		Manual
	Iris		Auto (DC type)*1
Angle of View (H × V)	1/3"	WIDE	100° 00' × 73° 45'
		TELE	35° 03' × 26° 18'
	1/4"	WIDE	73° 45' × 54° 49'
		TELE	26° 18' × 19° 44'
Angle of View (H × V) Aspect Ratio 16:9	1/3"	WIDE	109° 50' × 59° 51'
		TELE	38° 11' × 21° 29'
	1/4"	WIDE	80° 39' × 44° 38'
		TELE	28° 39' × 16° 07'
Focus Range (From the Lens Front) (m)			∞ - 0.3
Mass (g)			50

YV4.3x2.8SA-SA2

Applicable camera (model): 1 | 2/3 | 1/2 | **1/3** | **1/4**

4.3 ×

Applicable to 1/3

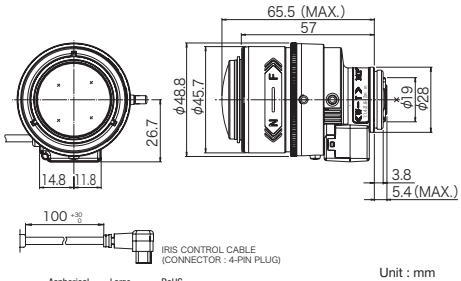

Unit : mm

Full HD 3MP

Vari-Focal: VARI | Wide Angle: WIDE | Telephoto Long Focal: TELE | DC Auto Iris: DC | CS Mount: CS-mt | Metal Mount: METAL | ND Filter: ND | Long Cable: 230 | Aspherical Lens: AT | Large Aperture Ratio: F1.4 | RoHS Compliant: RoHS

Focal Length (mm)			2.8 - 12 (4.3x)
Iris Range			F1.4 - T360(Equivalent to F360)
Operation	Zoom		Manual
	Focus		Manual
	Iris		Auto (DC type)*1
Angle of View (H × V)	1/3"	WIDE	100° 02' × 74° 03'
		TELE	23° 26' × 17° 36'
	1/4"	WIDE	74° 03' × 55° 06'
		TELE	17° 36' × 13° 13'
Angle of View (H × V) Aspect Ratio 16:9	1/3"	WIDE	109° 33' × 60° 08'
		TELE	25° 31' × 14° 23'
	1/4"	WIDE	80° 56' × 44° 51'
		TELE	19° 10' × 10° 48'
Focus Range (From the Lens Front) (m)			∞ - 0.3
Mass (g)			80

YV3.3x15SA-SA2

Applicable camera (model): 1 | 2/3 | 1/2 | **1/3** | **1/4**

3.3 ×

Applicable to 1/3

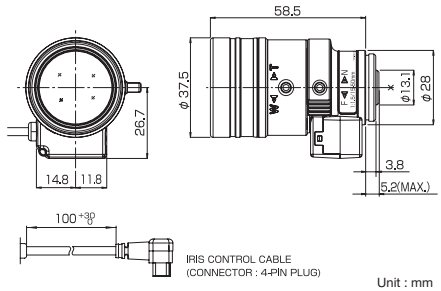

Unit : mm

Full HD 3MP

Vari-Focal: VARI | Telephoto Long Focal: TELE | DC Auto Iris: DC | CS Mount: CS-mt | Metal Mount: METAL | ND Filter: ND | Long Cable: 230 | Aspherical Lens: AT | Large Aperture Ratio: F1.5 | RoHS Compliant: RoHS

Focal Length (mm)			15 - 50 (3.3x)
Iris Range			F1.5 - T360(Equivalent to F360)
Operation	Zoom		Manual
	Focus		Manual
	Iris		Auto (DC type)*1
Angle of View (H × V)	1/3"	WIDE	18° 08' × 13° 34'
		TELE	5° 35' × 4° 12'
	1/4"	WIDE	13° 34' × 10° 10'
		TELE	4° 12' × 3° 10'
Angle of View (H × V) Aspect Ratio 16:9	1/3"	WIDE	19° 46' × 11° 04'
		TELE	6° 04' × 3° 26'
	1/4"	WIDE	14° 47' × 8° 18'
		TELE	4° 34' × 2° 35'
Focus Range (From the Lens Front) (m)			∞ - 0.8
Mass (g)			60

YV2.7x2.2SA-SA2

Applicable camera (model): 1 | 2/3 | 1/2 | **1/3** | **1/4**

2.7 ×

Applicable to 1/3

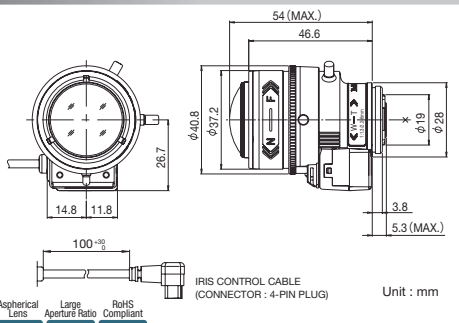

Unit : mm

Full HD 3MP

Vari-Focal: VARI | Wide Angle: WIDE | DC Auto Iris: DC | CS Mount: CS-mt | Metal Mount: METAL | ND Filter: ND | Long Cable: 230 | Aspherical Lens: AT | Large Aperture Ratio: F1.3 | RoHS Compliant: RoHS

Focal Length (mm)			2.2 - 6 (2.7x)
Iris Range			F1.3 - T360(Equivalent to F360)
Operation	Zoom		Manual
	Focus		Manual
	Iris		Auto (DC type)*1
Angle of View (H × V)	1/3"	WIDE	120° 00' × 91° 36'
		TELE	46° 26' × 34° 59'
	1/4"	WIDE	91° 36' × 69° 21'
		TELE	34° 59' × 26° 18'
Angle of View (H × V) Aspect Ratio 16:9	1/3"	WIDE	129° 43' × 75° 23'
		TELE	50° 30' × 28° 38'
	1/4"	WIDE	99° 23' × 56° 53'
		TELE	38° 04' × 21° 31'
Focus Range (From the Lens Front) (m)			∞ - 0.3
Mass (g)			55

*1 : The iris automatically closes when the camera is turned off.
※ Each of the above products is also available in manual type. ※ Each of the above products is also available in long cable type (230 mm).