DS-1275ZJ (SPTZ)

Vertical Pole Mount

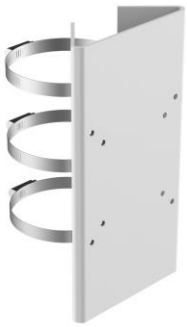

Feature

- With surface spray treatment
- One-piece formation ensures the reliable structure

Dimension

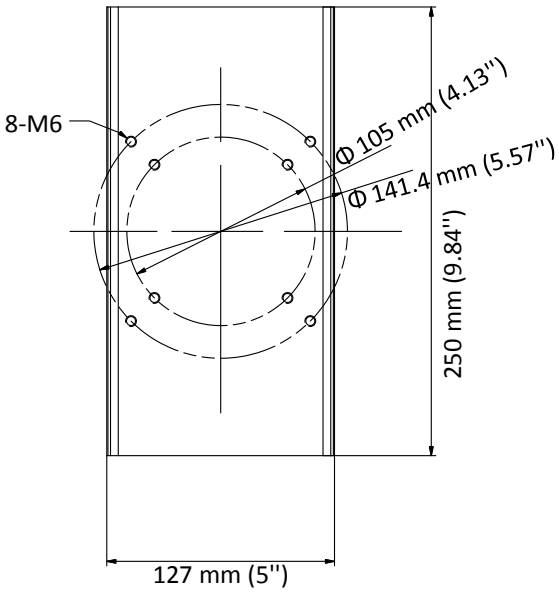

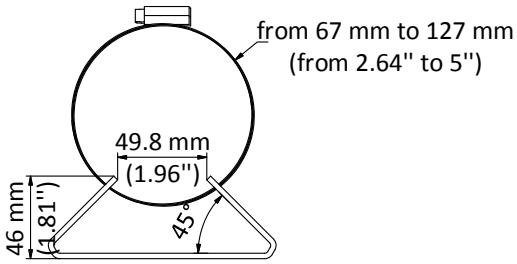

Available Model

DS-1275ZJ (SPTZ)

Parameter

Model / Parameters	DS-1275ZJ (SPTZ)
	Vertical Pole Mount
Appearance	Hikvision White
Material	Stainless Steel, Steel
Dimension	250 mm × 127 mm × 46 mm (9.84" × 5" × 1.81")
Weight	Approx. 1345 g (2.97 lb.)

Note

- The mount should be installed on a flat surface.
- Waterproof rubber is necessary for the outdoor application.
- The wall should be capable of supporting at least 3 times as much as the total weight of the camera and the mount.
- The maximum load capacity of the mount is 10 kg (22.05 lb.).